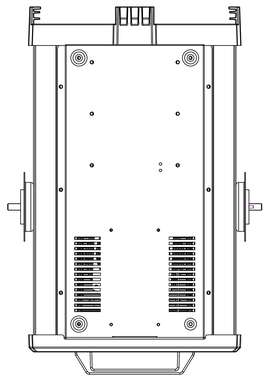

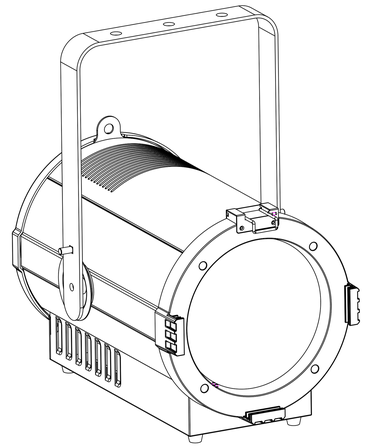

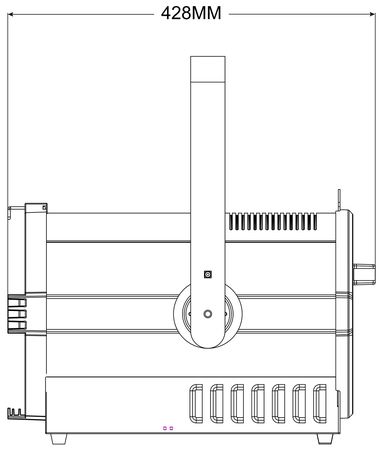
428MM

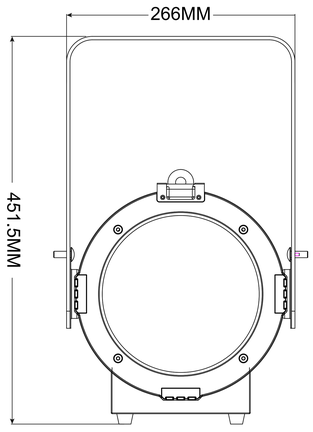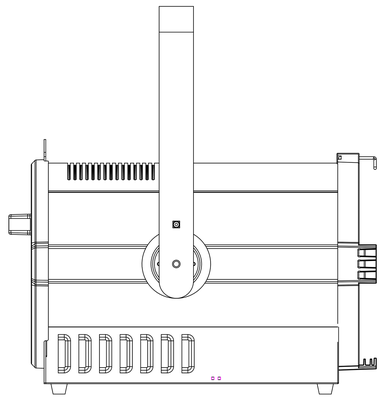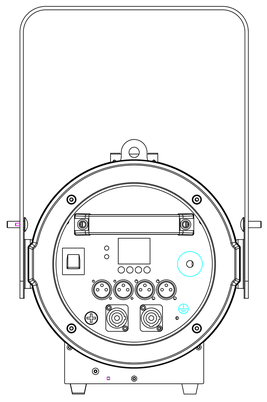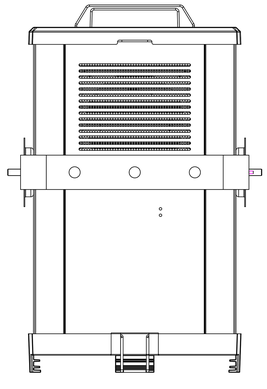
266MM
451.5MM